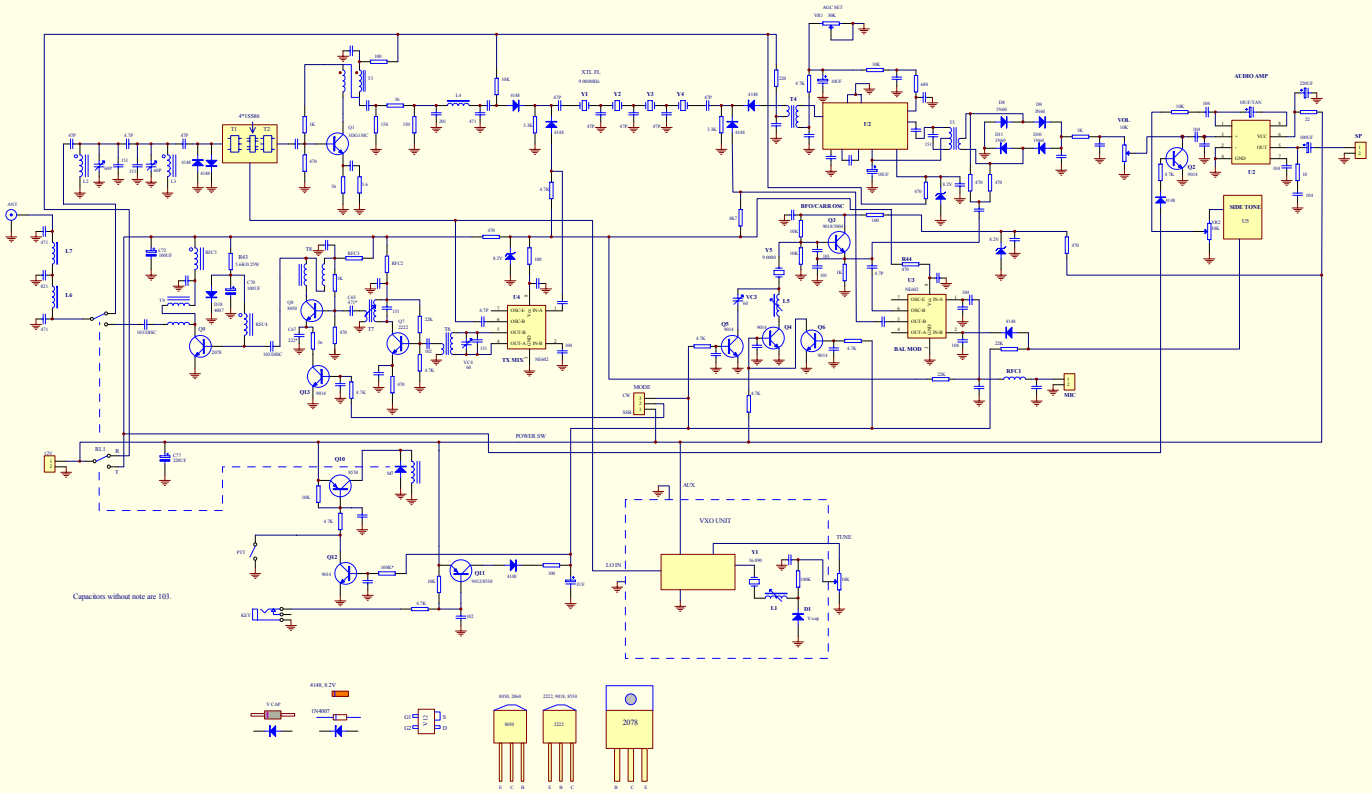

Title		COUNTRYMAN
Size	Number	Revision
A1		
Date:	26-May-2009	Sheet of
File:	D:\Kit\2009\DOB\	Drawn By: